INSTRUCCIONES KURA

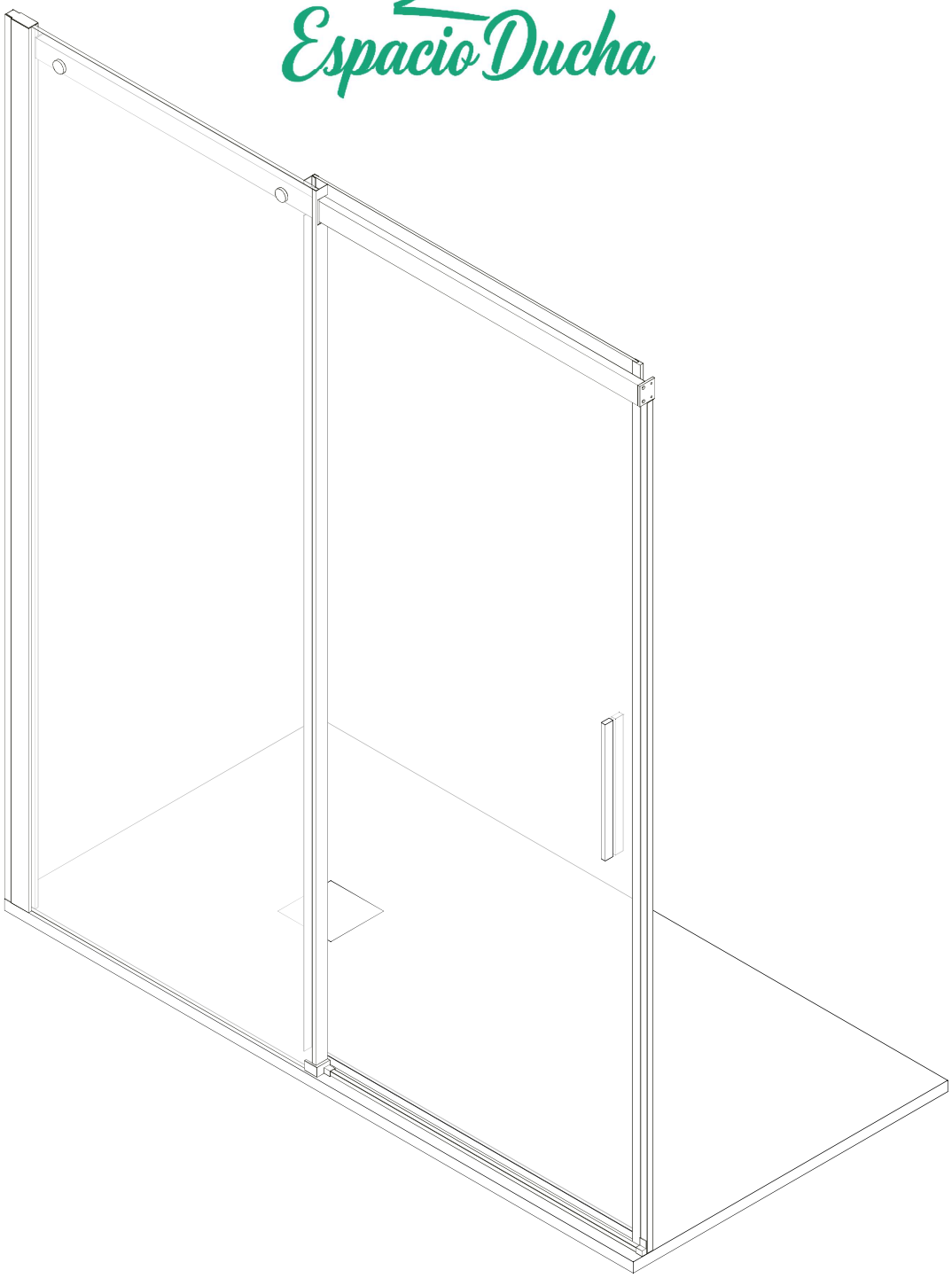

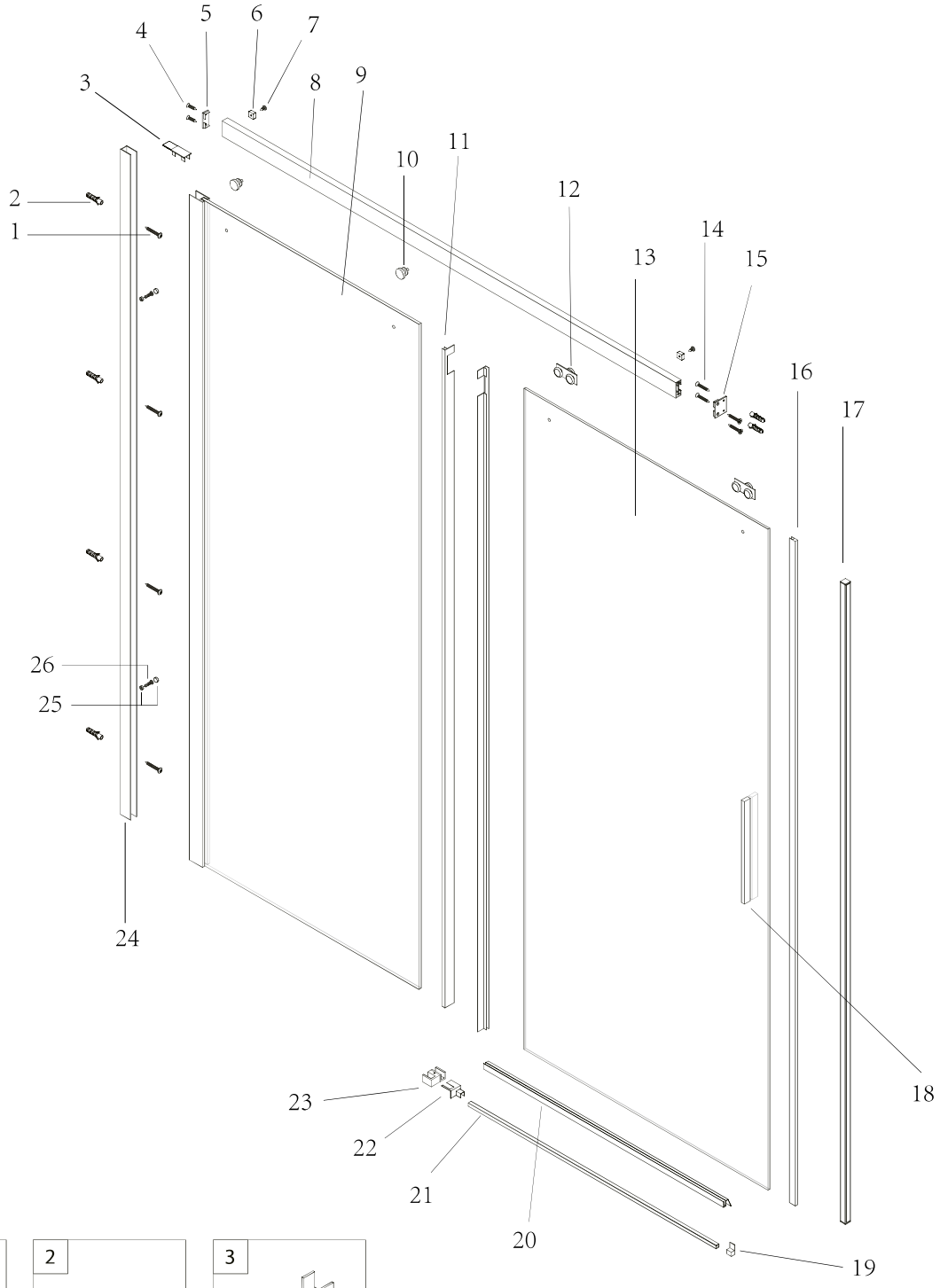
1
2
3
4
5
6
7
8
9
10
11
12
13
14
15
16
17
18
19
20
21
22
23
24
25
26

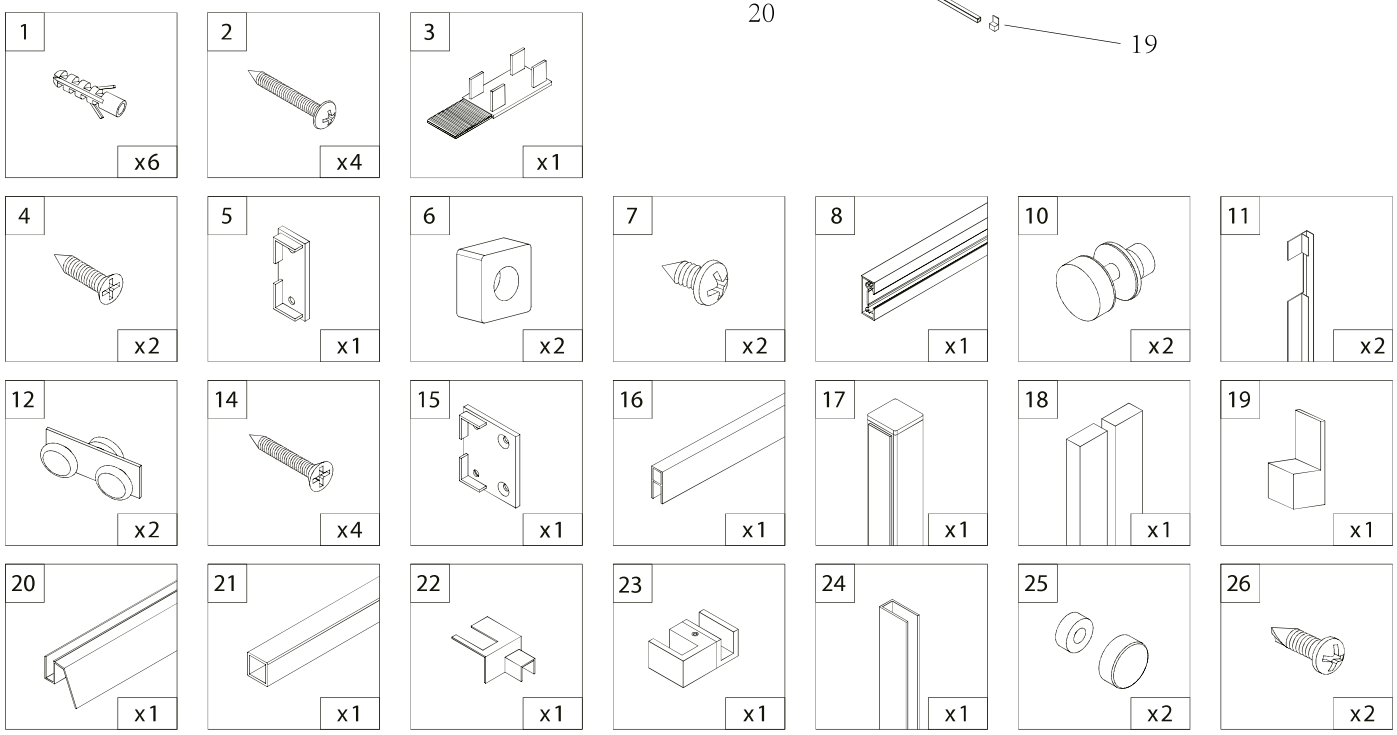
1 x6
2 x4
3 x1
4 x2
5 x1
6 x2
7 x2
8 x1
10 x2
11 x2
12 x2
14 x4
15 x1
16 x1
17 x1
18 x1
19 x1
20 x1
21 x1
22 x1
23 x1
24 x1
25 x2
26 x2

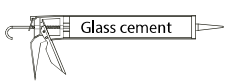

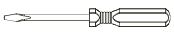
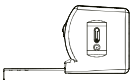

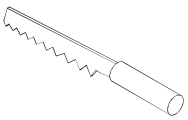

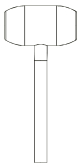
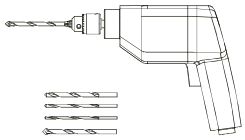

1

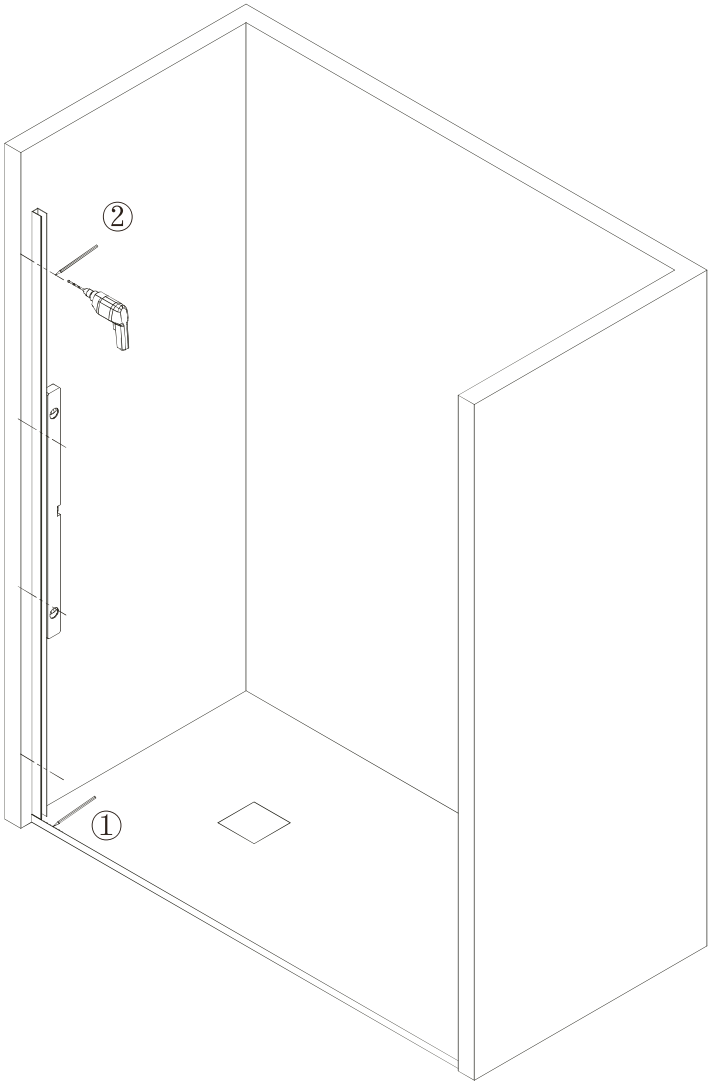

①

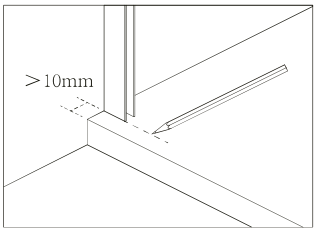

②

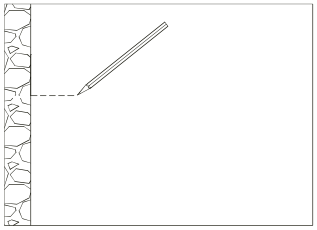

③

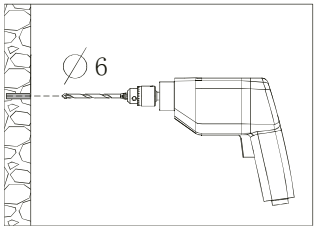

④

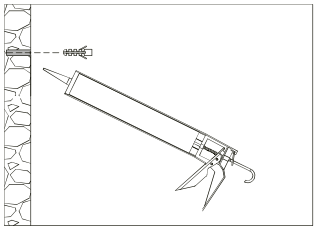

⑤

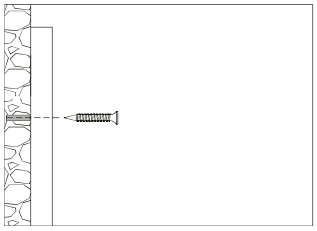

2

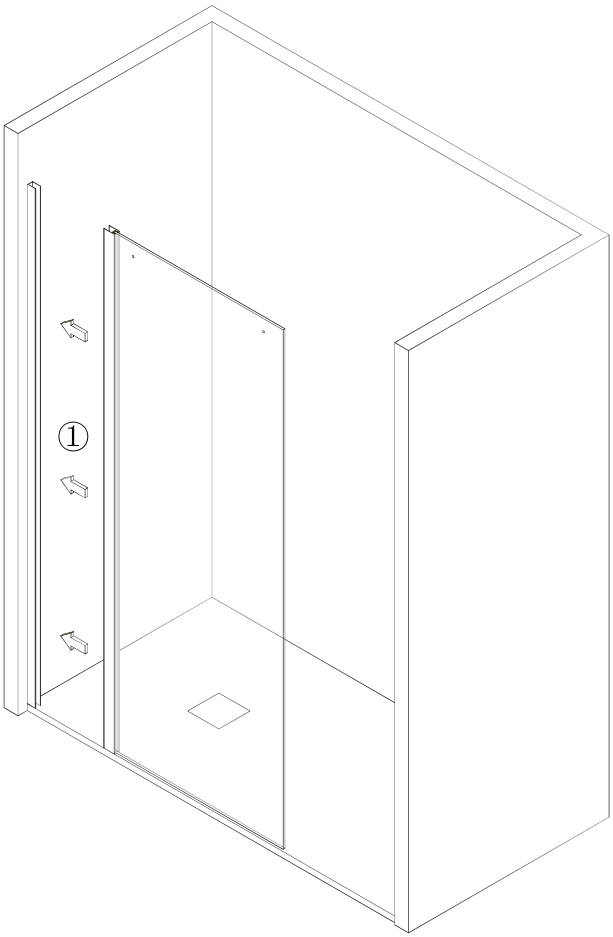

①

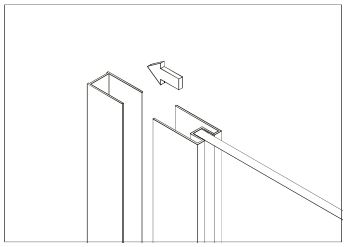

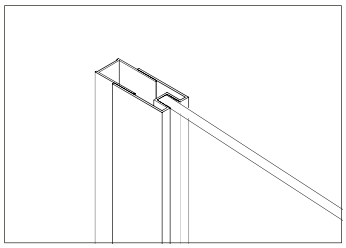

3

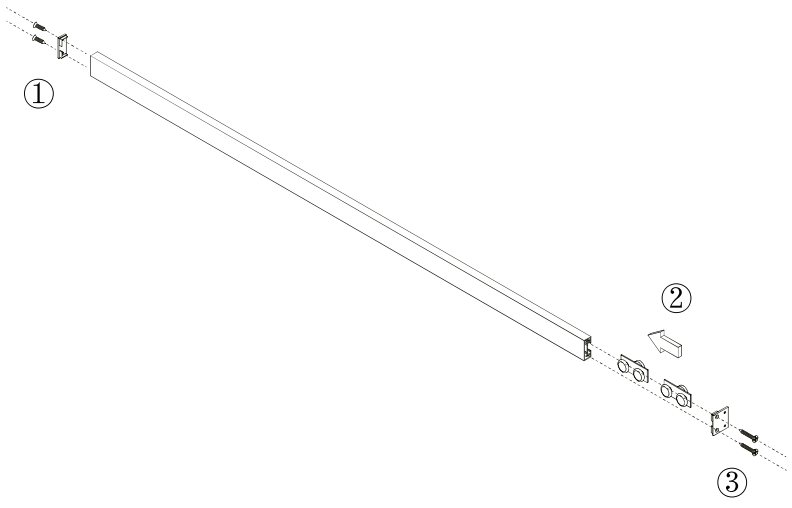

①

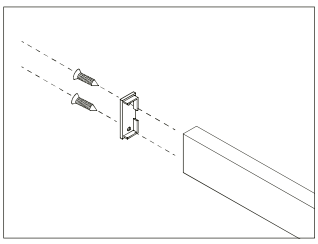

②

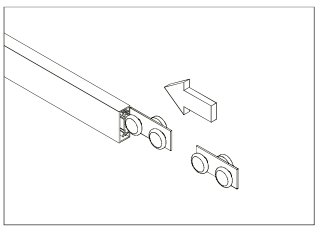

③

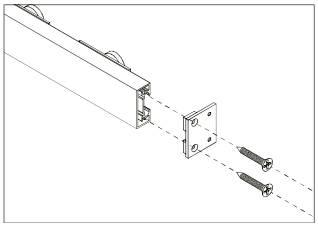

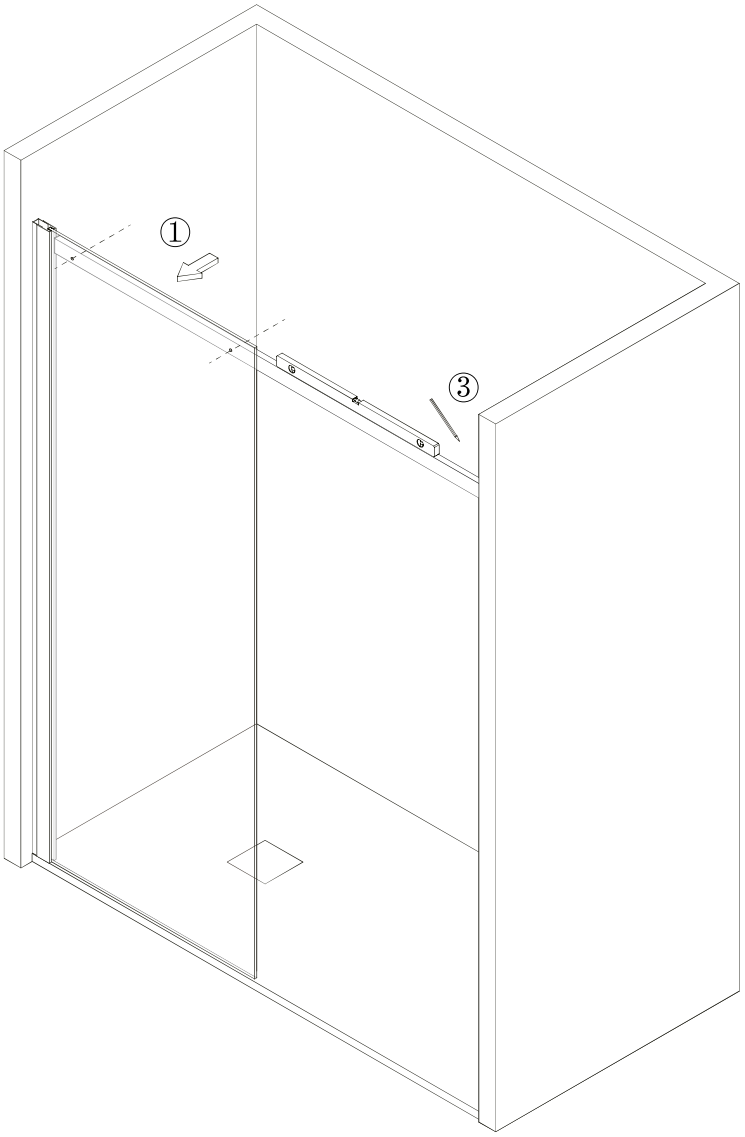

②

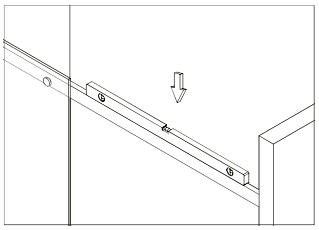

③

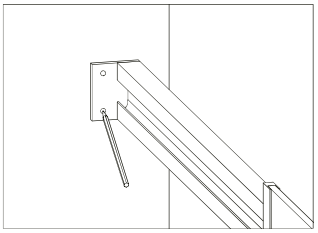

④

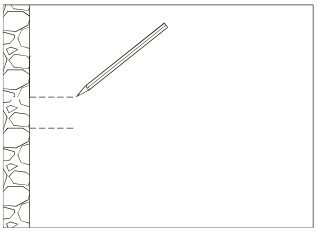

⑤

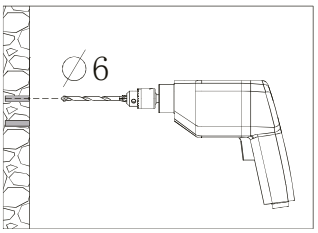

⑥

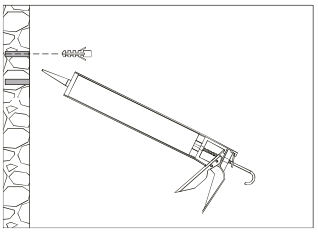

5

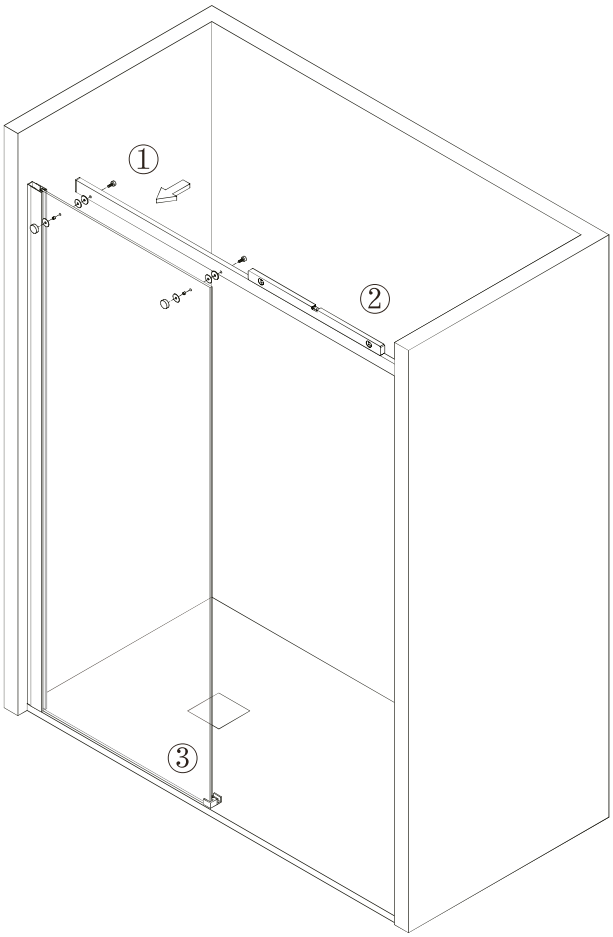

①

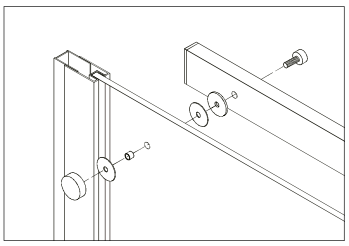

②

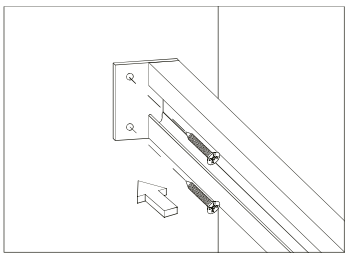

③

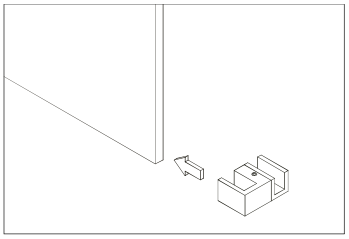

6

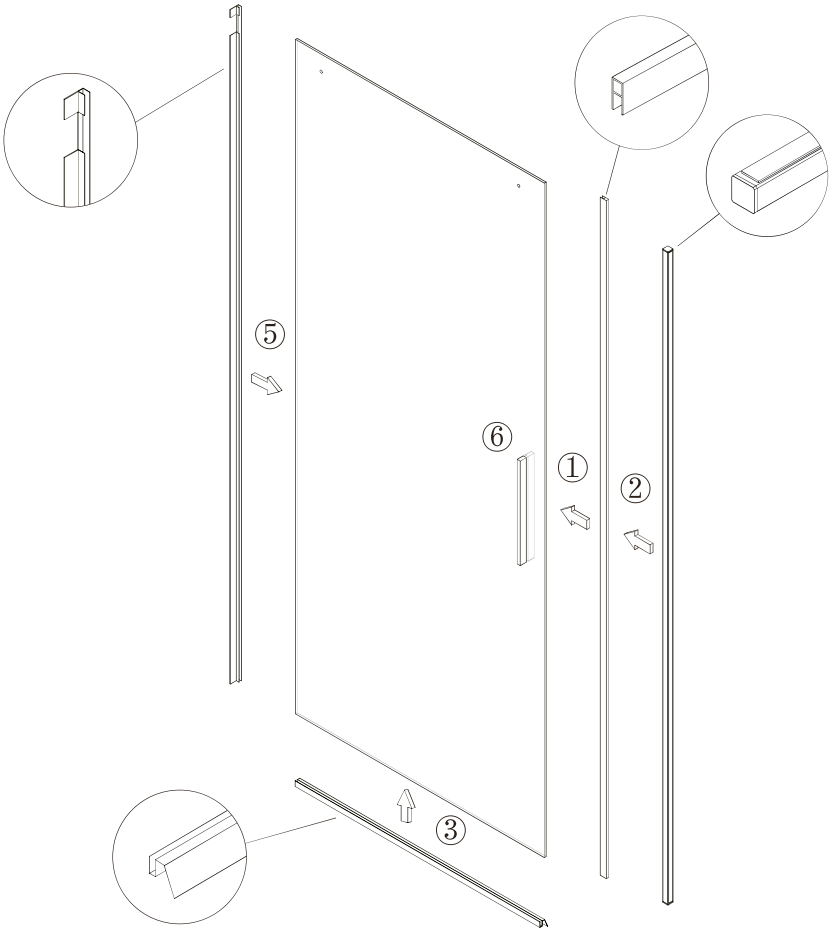

④

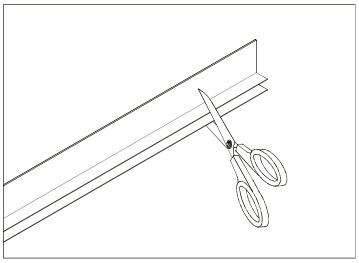

⑥

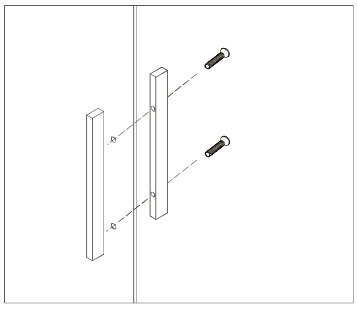

7

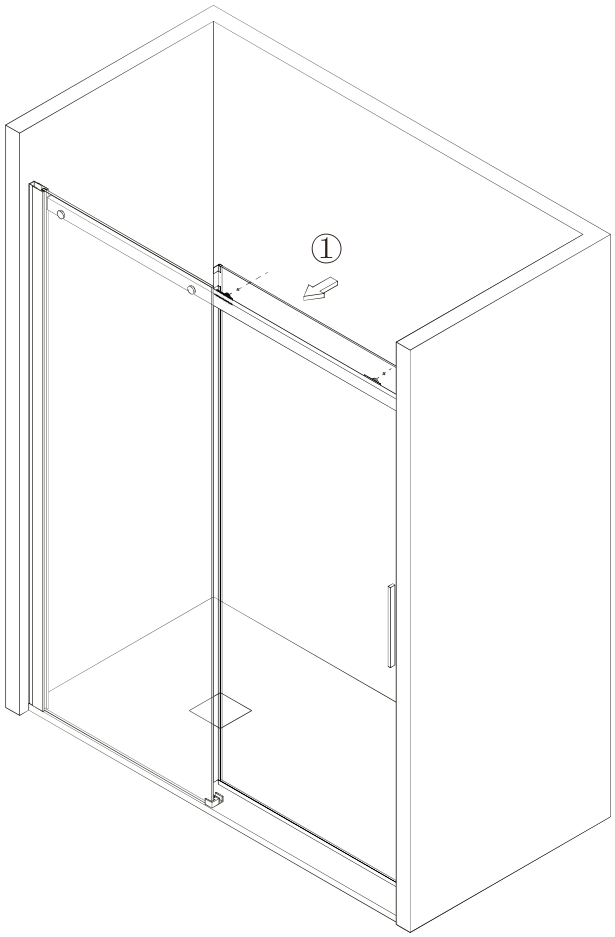

①

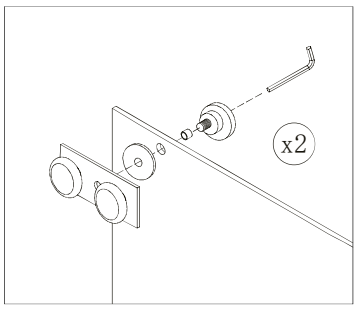

8

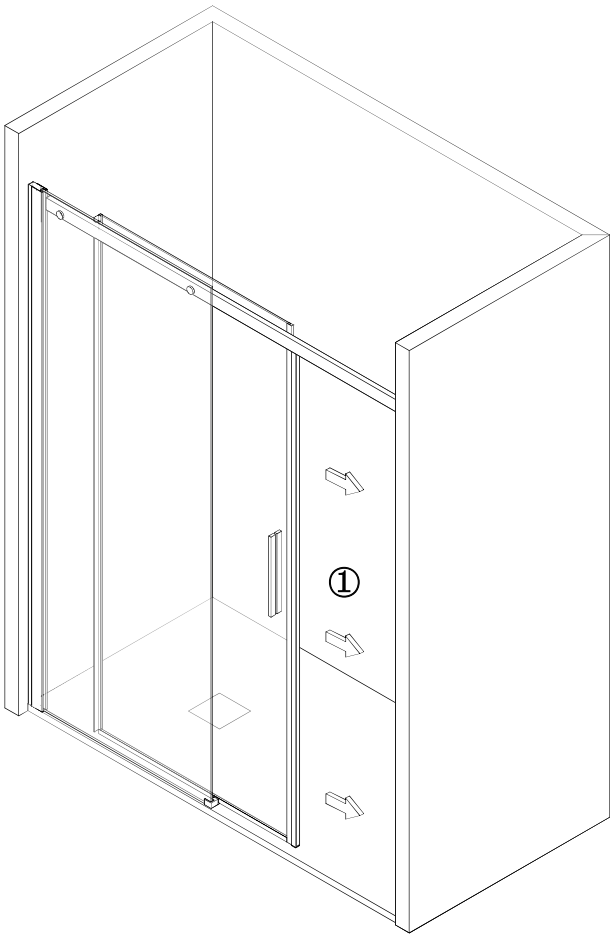

①

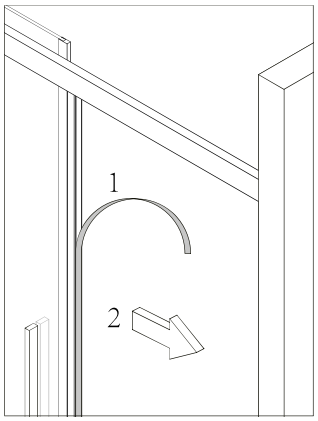

②

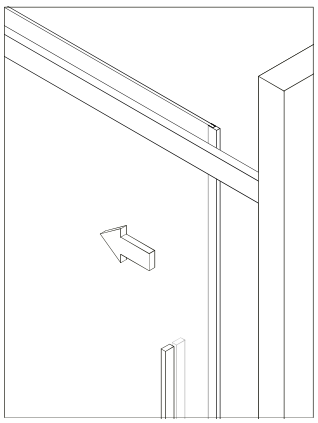

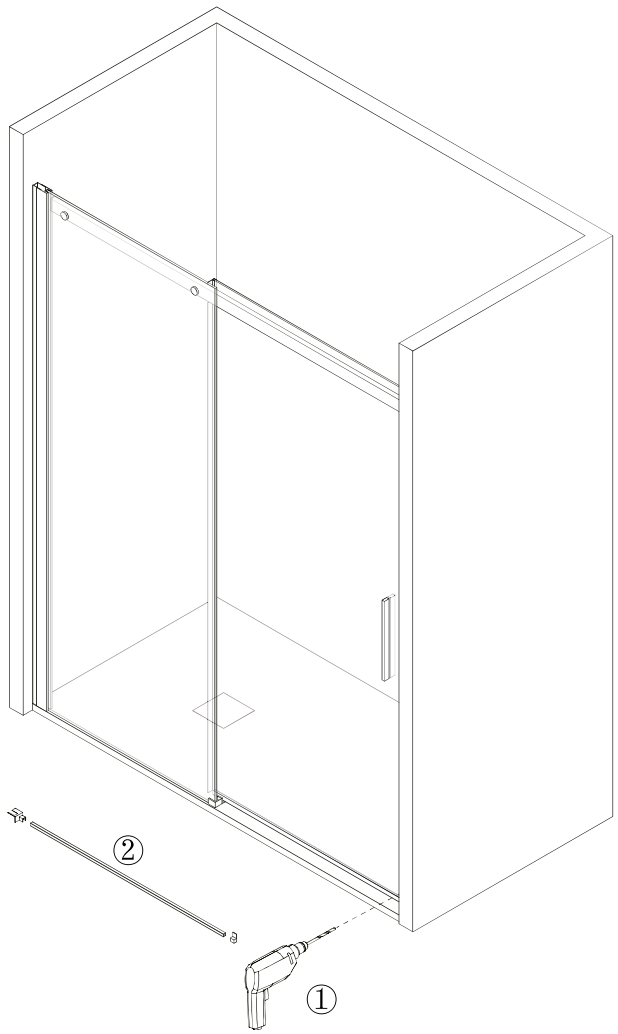

①

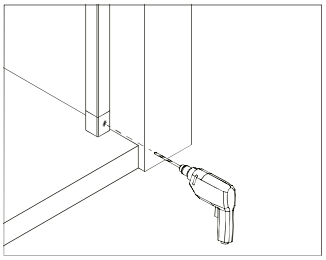

②

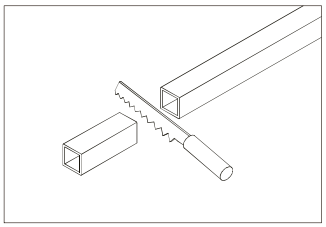

③

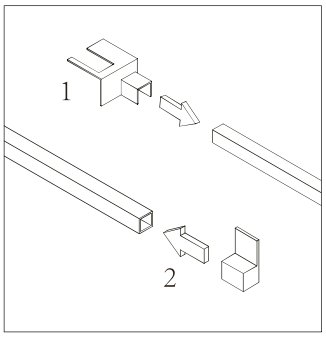

④

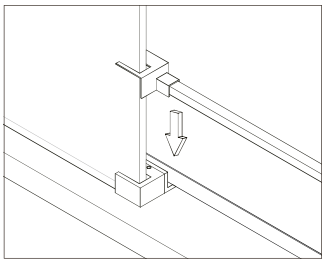

10

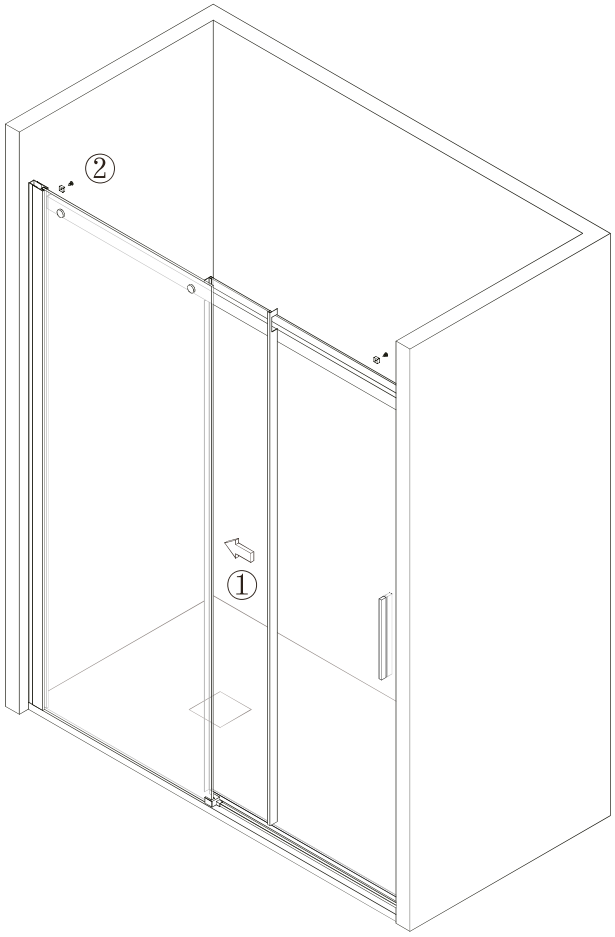

①

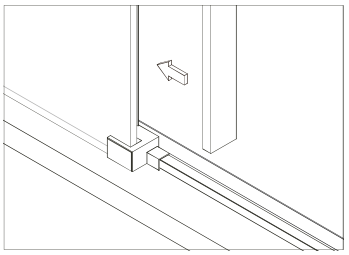

②

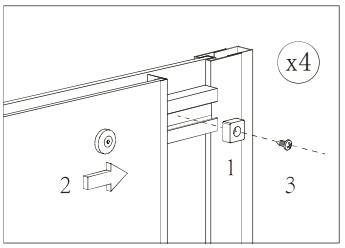

11

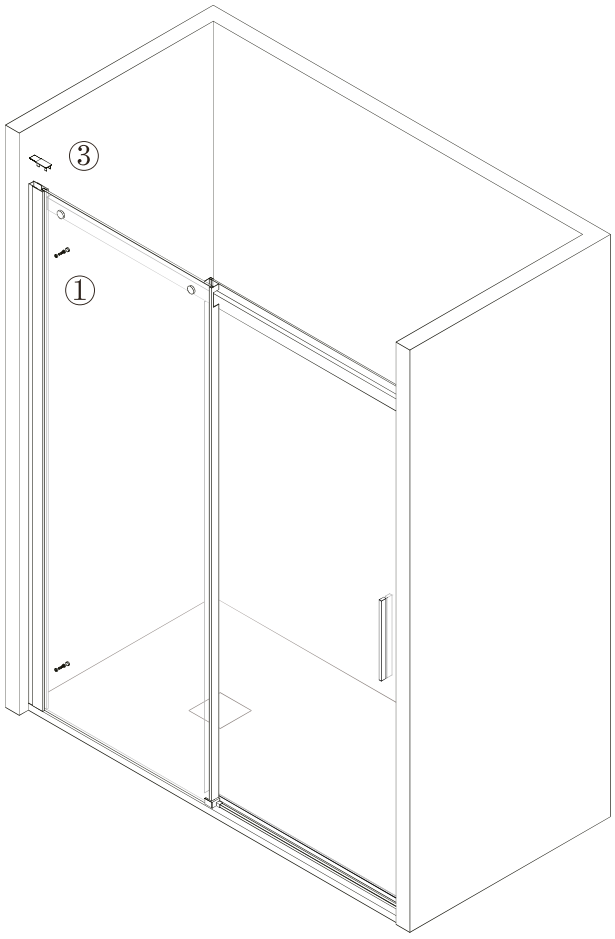

①

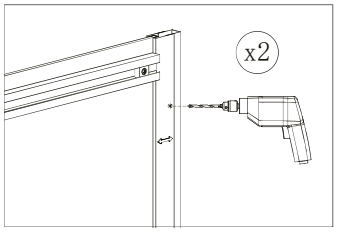

②

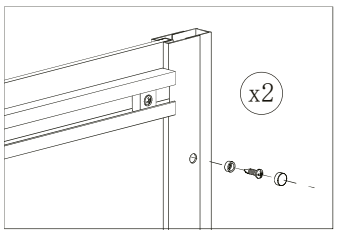

③

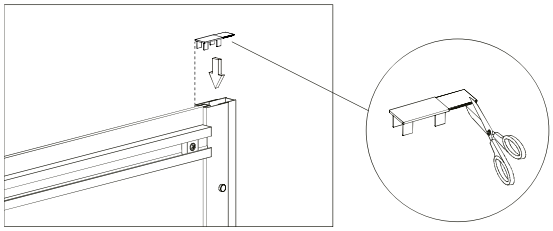

12

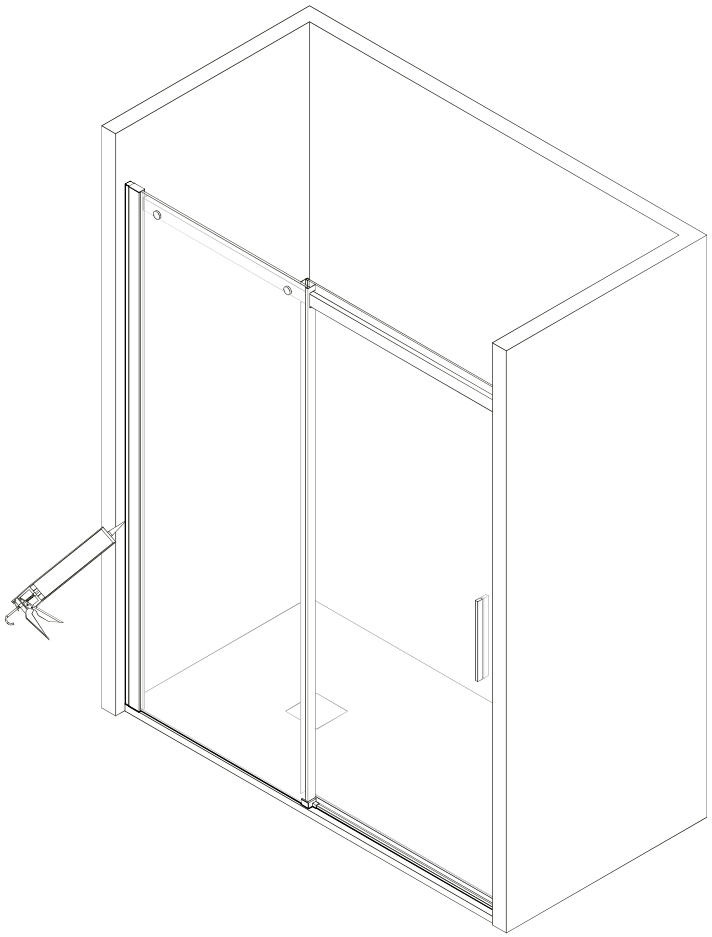

①

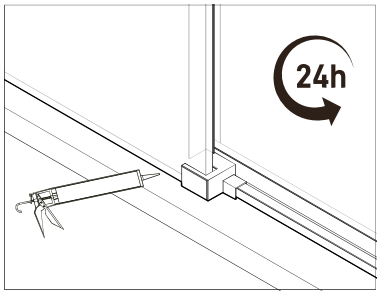
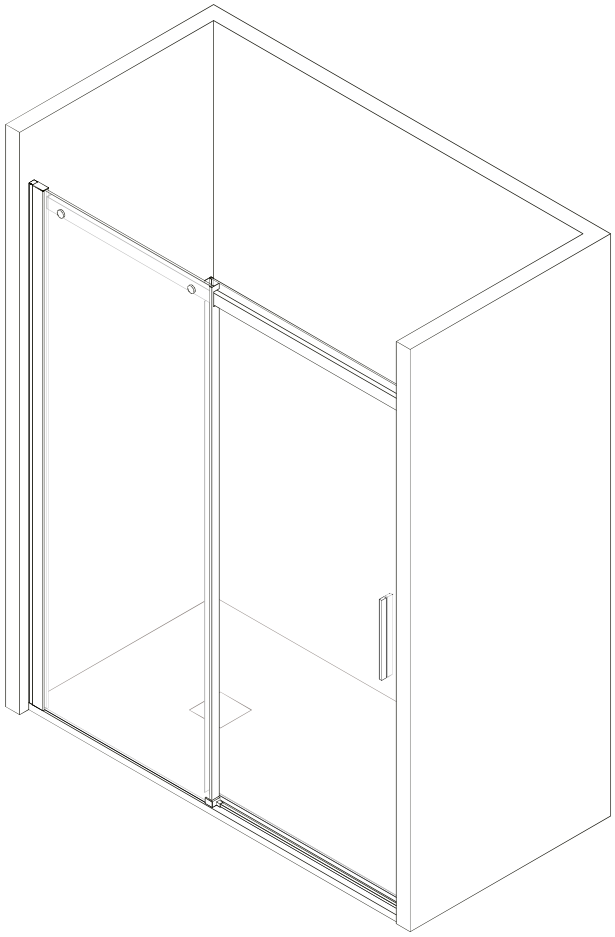
13